F.B.G. PRODUCT DATA SHEET

STYLE B40E75

DESC. TUXEDO DAYBED

DOMESTIC -

IMPORT X

VENDOR INFORMATION:
LOCATION XIAMEN

NAME JD

NUMBER -

HARDWARE NEEDED?

Y X

N -

DES. FBG

SPINDLE COUNT

ISSUE C 3/3 - 5/0 -

DATE 02-12-08 4/6 - 6/6 -

FINISH(S): GOLD FROST

FINISH PROCESS: STEP 1 –GOLD/SILVER
STEP 2 – BLACK GLAZE
STEP 3 – LACQUER

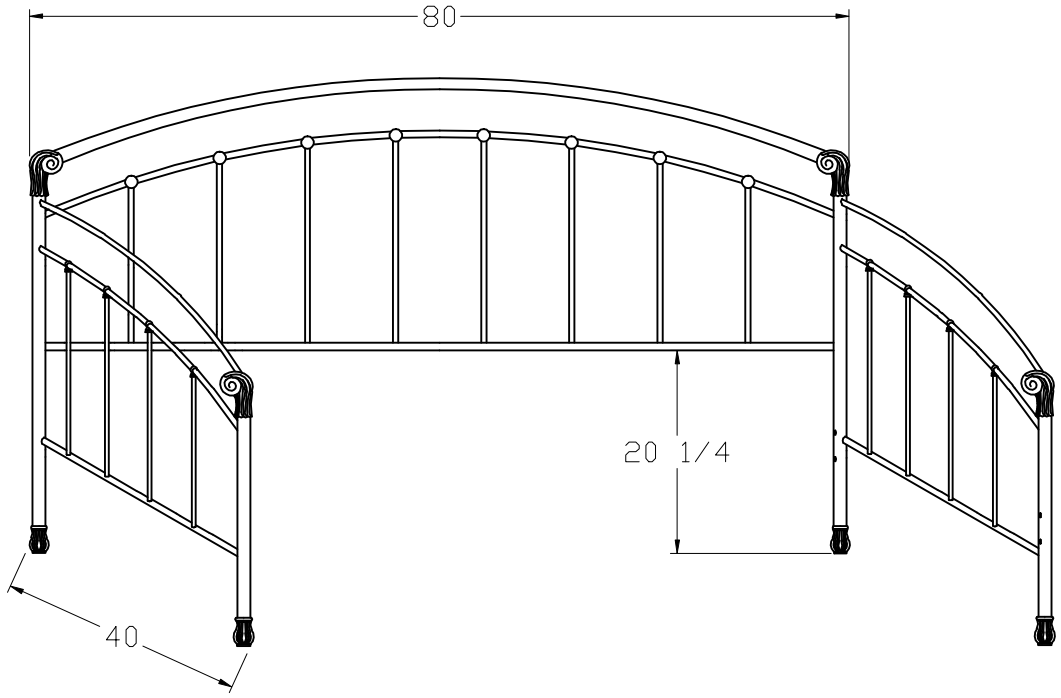

USE THIS AS REFERENCE ONLY

#	DESCRIPTION
–	HARDWARE BAG # 361401
–	(6) 1/4–20 1 ¼" COUNTER SUNK ALLEN HEAD SCREW
–	(8) 1/4–20 1" FLAT ALLEN HEAD SCREW
–	(8) ¼" ID LOCK WASHERS
–	(8) ⅝" OD METAL WASHER
–	(1) ALLEN WRENCH
–	–
–	–
–	–
–	–
–	–
–	–
–	–
–	–
–	–
–	–
–	–
–	–
–	–
–	–
–	–
–	–

ISU	DATE	REVISION
B	02–12–08	ADD FINISH STEPS
C	02–12–08	ADD NEW DIM

	HEIGHT		WIDTH		DEPTH	WEIGHT (LBS.) PACKED		UNPACKED		# OF CTNS		CARTON DIM'S	CU FT.	U.P.S.	
SIZE	D–BED	–	D–BED	–	D–BED	SIDE	BACK	–	–	D–BED	–			Y	N
3/3	–	–	–	–	–	–		–	–	–	–	–	–	–	–
4/6	–	–	–	–	–	–		–	–	–	–	–	–	–	–
5/0	–	–	–	–	–	–		–	–	–	–	–	–	–	–
6/6	–	–	–	–	–	–		–	–	–	–	–	–	–	–
D–BED	46 1/2	–	80	–	40	45		–	–	1	–	81 X 47 3/4 X 4	8.953	–	x
–	–	–	–	–	–	–		–	–	–	–	–	–	–	–

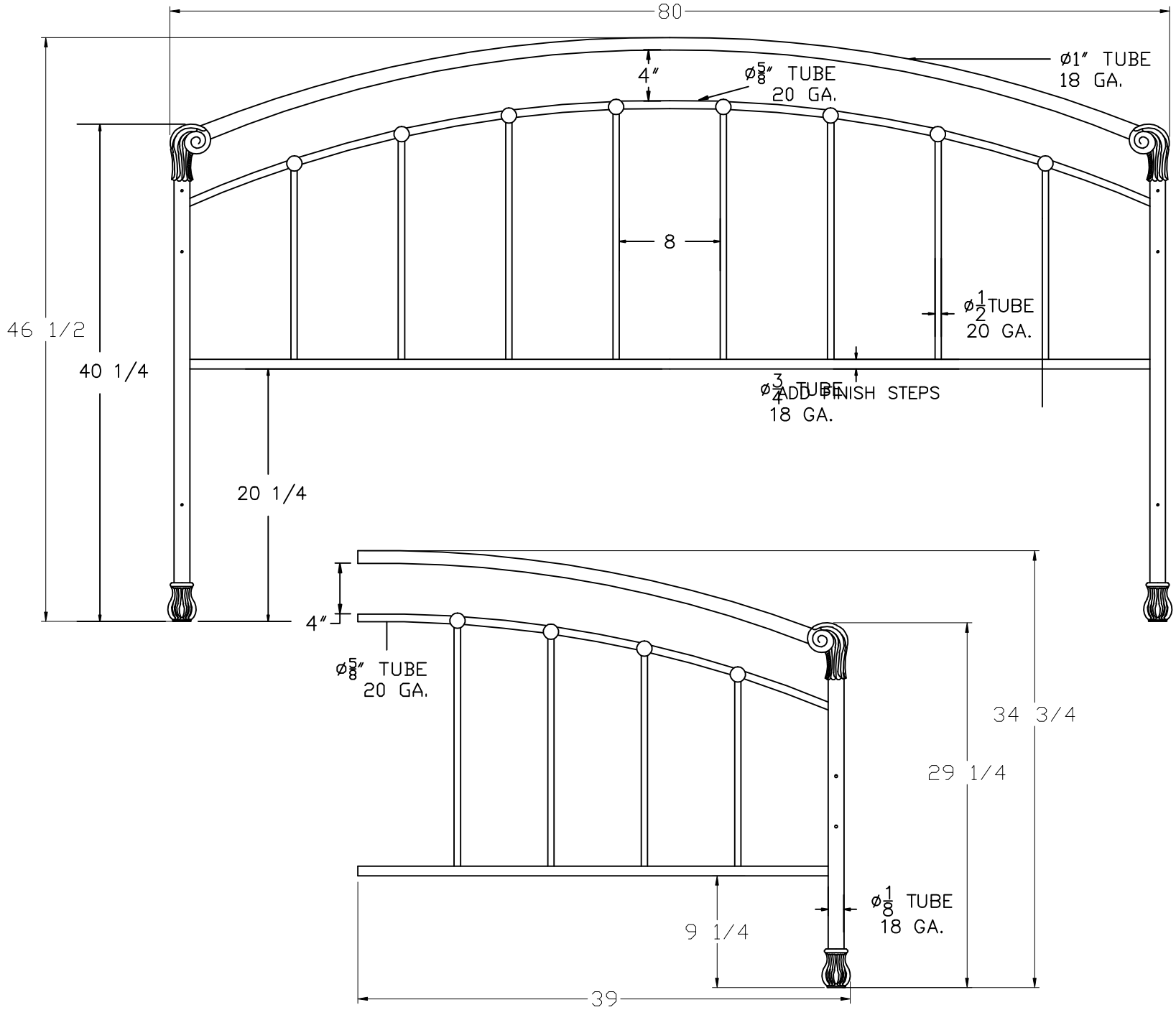

USE THIS AS REFERENCE ONLY

TUXEDO DAYBED