F.B.G. PRODUCT DATA SHEET

STYLE B50401 B50402

DESC. STRATFORD DAYBED

DOMESTIC -

IMPORT X

VENDOR INFORMATION:
LOCATION INDONESIA
NAME JB
NUMBER -

HARDWARE NEEDED?
Y X
N -

DES. FBG

ISSUE A

DATE 11-14-07

SPINDLE COUNT
3/3 - 5/0 -
4/6 - 6/6 -

FINISH(S): BALAM WOOD WITH MAHOGANY FINISH

FINISH PROCESS: 1–COLOR, 2–SEALER, 3–SAND, 4–SEALER, 5–SAND, 6–TOP COAT

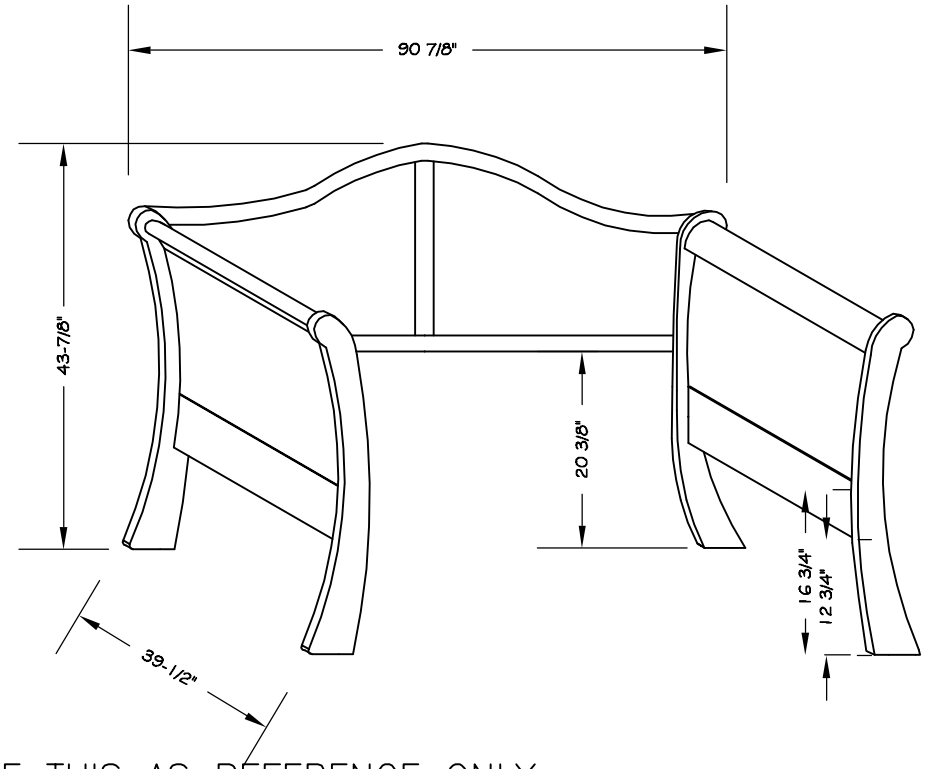

USE THIS AS REFERENCE ONLY

#	DESCRIPTION
–	
–	**PART #361101 HARDWARE BAG FOR DAYBED**
–	(1) 6mm x 1" FLAT ALLEN HEAD SCREW–8
–	(2) 6mm x 1 1/2" FLAT ALLEN HEAD SCREW–4
–	(3) 1/4" ID METAL WASHER–12
–	(4) 1/4" ID PVC WASHER–8
–	(5) ALLEN WRENCH–1
–	(6) WARRANTY TAG ATTACHED ON PANEL–1
–	–
–	–
–	–
–	–
–	–
–	–
–	–
–	–
–	–
–	–
–	–
–	–
–	–
–	–

ISU	DATE	REVISION
A	11/26/07	MEASUREMENT REVISION

SIZE	HEIGHT D–BED	HEIGHT –	WIDTH D–BED	WIDTH –	DEPTH D–BED	WEIGHT (LBS.) PACKED SIDE	WEIGHT (LBS.) PACKED BACK	WEIGHT (LBS.) UNPACKED –	WEIGHT (LBS.) UNPACKED –	# OF CTNS D–BED	# OF CTNS –	CARTON DIM'S		CU FT.	U.P.S. Y	U.P.S. N
3/3	-	-	-	-	-	-		-	-	-	-	-		-	-	-
4/6	-	-	-	-	-	-		-	-	-	-	-		-	-	-
5/0	-	-	-	-	-	-		-	-	-	-	-		-	-	-
6/6	-	-	-	-	-	-		-	-	-	-	-		-	-	-
D–BED	43 11/16"	-	87 5/16"	-	40 1/2"	53	24	-	-	2	-	42" X 36-3/4" X 11-1/2"	93-1/2" X 24-1/2" X 1-1/2"	10.27 1.99	-	x
–	-	-	-	-	-	-		-	-	-	-	-		-	-	-

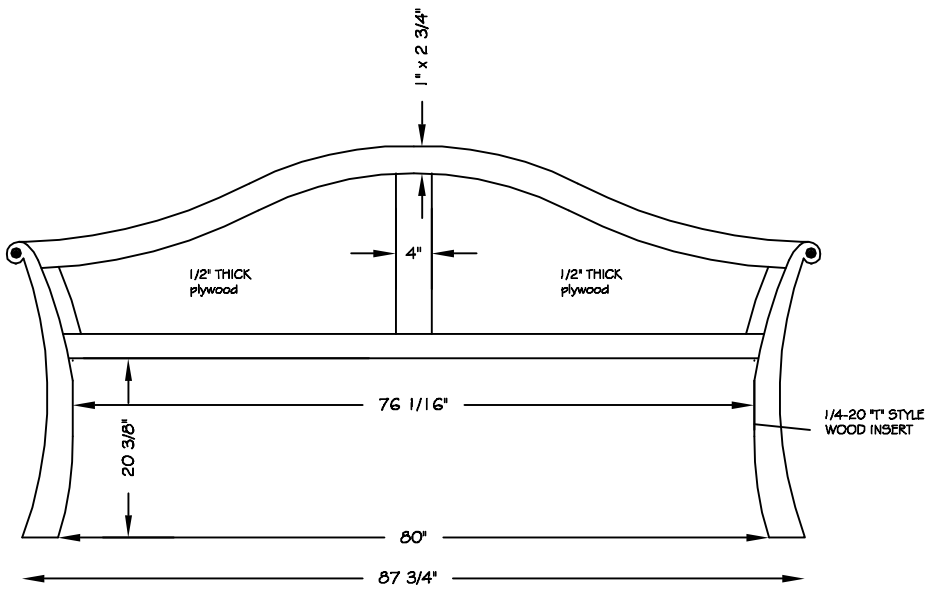

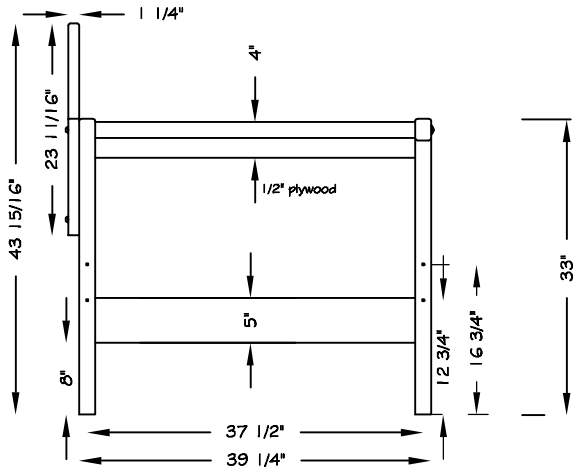

USE THIS AS REFERENCE ONLY

STRATFORD DAYBED